Wheel Balancer User's Manual

Model # AWB-139ML3

SAFETY

Read all instructions manual carefully before operation!
Never operate the machine in any unsafe conditions!

Keep the machine away from moist, corrosive and hot surrounding.

Start up.

1) Make sure the voltage is within the range stated in the label, and the earth wire is properly grounded.

2) Switch on the wheel balancer, the system indicates as follows.

Home screen

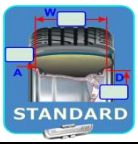 **STANDARD Mode for Steel rim**	**System setting**
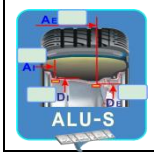 **ALU-S Mode for alloy rim**	

One of the 2 types of keypad interface will be installed in your system.

Type A: Rotating encoder to select functions, press the encoder to confirm.

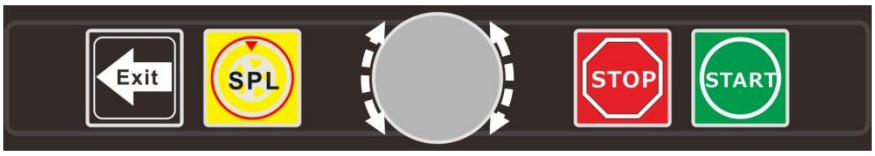

Type B: Arrow keys to select functions, press the center key to confirm.

1.1. Ready to balance a wheel

NOTE: Calibration is required when the wheel balancer is first put into operation at a fixed location, after itis moved to a new location or when the technician suspects the machine of providing incorrect values or when main components have been replaced. It is recommended to perform a calibration every 3 months, but especially while having enormous possible changes of temperature during the seasons. See the detail procedure in the calibration section.

1.1.1. MOUNTING A WHEEL ONTO THE SPIN SHAFT

Select the correct size centering-cone diameter that will ensure the wheel rim is tightly secured (no wobble) to the thread shaft. Insert the centering-cone to the spin shaft and partially through the center hole of the rim. Please pay attention use cones and quick hub wing nut in the different fields of application! Below are some of the different methods for the quick hub wing nut wheel mounting, choose the proper one in your application.

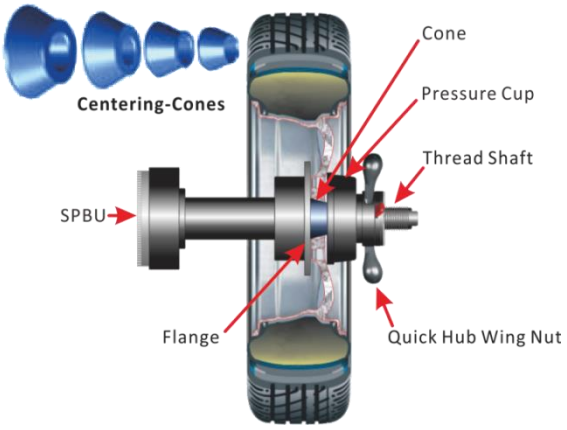

1.1.2. BACK CENTERING-CONE MOUNTING

The majority of original equipment rims and steel rims can be handled by using this procedure. The wheel is back-cone-centered, centering-cone from the INNER side of the hub.

1） Make sure the pressure cup is attached to the quick hub wing nut.

2） Select the centering-cone that best fits the center hole in the rim. Slide the centering-cone over the thread shaft with the larger diameter towards the flange, small diameter joining the center hole of the rim.

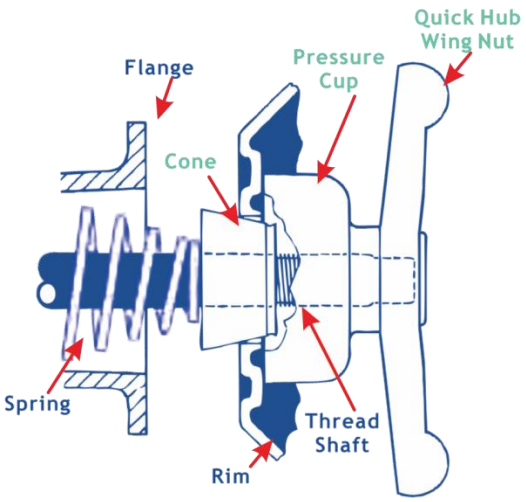

Back Centering-Cone Mounting

3） Lift the wheel onto the thread shaft and center it onto the centering-cone. Make sure to position the INNER side of the wheel rim against the flange and cone.

4) Mount the quick hub wing nut with pressure cup onto the thread off the spin shaft and tighten it firmly against the rim. The quick hub wing nut should engage the threads for at least three full turns.

NOTE ： Use the nylon spacer between rim and pressure cup to protect custom wheel finishes.

1.1.3. FRONT CENTERING-CONE MOUNTING

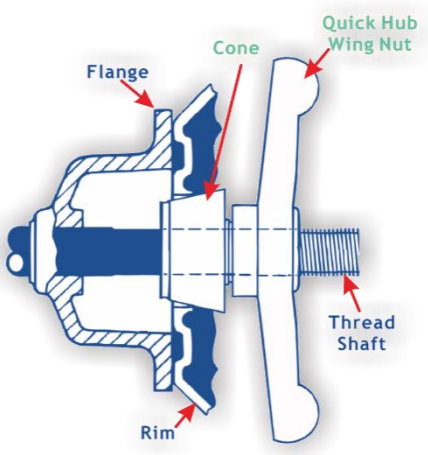

Front Centering-Cone Mounting

A wheel should only be centered with this method when the type of the INNER surface of the rim is not convenient to provide an accurate centering seat.

1） Make sure the pressure cup is **NOT** attached to the quick hub wing nut.

2） Lift the wheel onto the threaded spin shaft and slide it back against the shaft flange. Make sure to position the INNER side of the wheel rim against the flange.

3） Slide the centering-cone onto the shaft into the middle of the wheelrim. It is necessary to lift the wheel to get the centering-cone placed in the center hole.

4） Fit the quick hub wing nut without pressure cup onto the spin shaft. Tighten it securely against the centering-cone. The hub wing nut must engage the threads for at least three full turns.

1.1.4 Universal Adaptor Mounting (optional)

For wheel without center hole you must use the optional Universal Adaptor.
For Universal Adopter details see in the Original **E**quipment **M**anufacturer's manual.

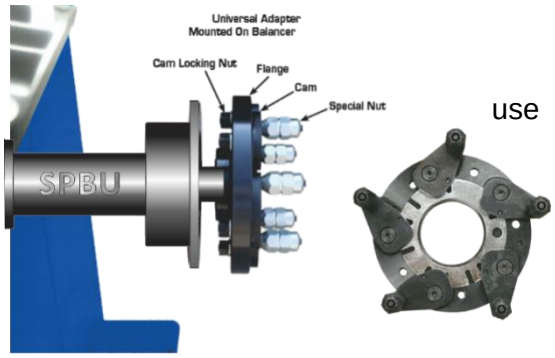

Universal Adaptor Mounting (optional)

1.2Standard wheel data entry

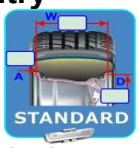

From the home screen, select the icon to enter **standard wheel data entry screen (as shown in the picture)**

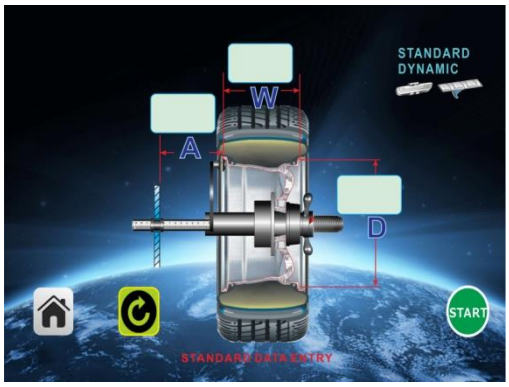

Wheel dimension data must be entered before a wheel can be balanced. There are 2 ways to enter wheel data A, D and W, manual entry and automatic entry.

Home	Recalculate	START Wheel Spin Wheel spin automatically when wheel hood lowered

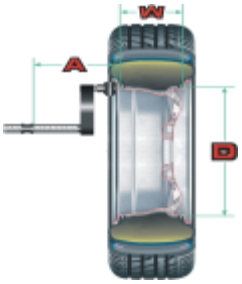

DEFINITIONS OF THE WHEEL DATA

A =Distance — The distance is measured from the wheel balancer to the INNER plane of the rim (INNER weight location).

W =Width — The width of the rim at the rim flange.

D =Diameter — The rated diameter of the rim, it is indicated on the tire.

2. BALANCING PROGRAM

2.1. STANDARD DYNAMIC BALANCING

Wheel dimension data must be entered before a wheel can be balanced. There are 2 ways to enter wheel data A, D and W, manual entry and automatic entry.

2 .1.1. Distance A and Rim Diameter D

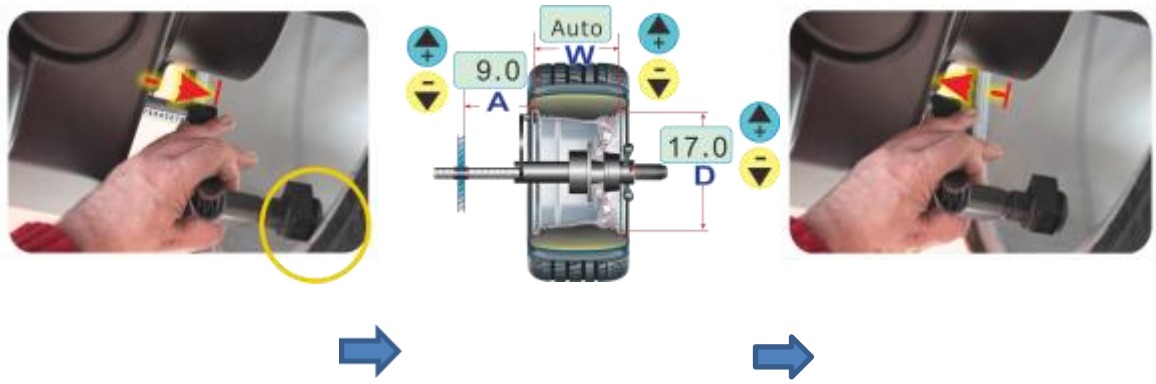

1. Bring out the measuring arm and make the tip contact on the inner side
2. Hold the measuring arm in the position until the display windows A and D
3. Return the arm back to the home position,

of the rim.

showing the values.

Position of the measuring arm shall be correctly placed to ensure accurate data acquisition. If an incorrect value has been acquired during measurement, move the arm back to home position and repeat the operation.

2.1.2. Rim width W (for models equipped with sonar measuring device)

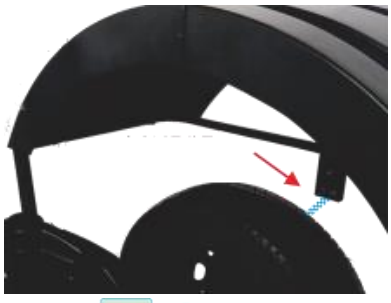

Lower down the wheel guard to enter the wheel width **W** automatically.

The below pictures show the process of wheel width measuring data acquisition.

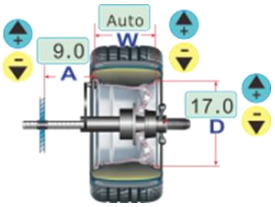

Ready to measure

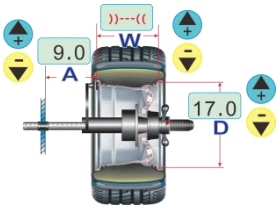

Measurement in progress

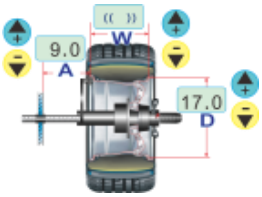

Measurement completed

With the wheel guard lowered down and the completion of wheel width measurement, the wheel spins automatically and stops with balancing result..

2.1.3. Result of Standard Dynamic balancing

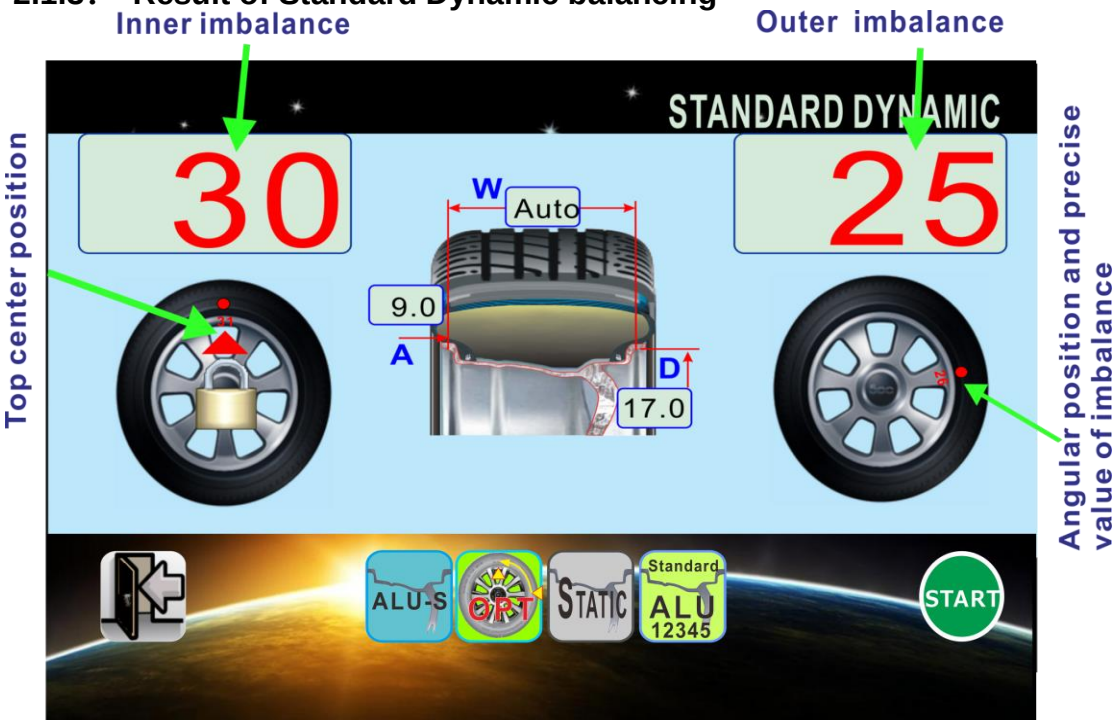

	Back to home screen		Enter OPT program
ALU-S	Enter ALU-S program	STATIC	Enter Static balancing program
Standard ALU 12345	Switching ALU 1~5 programs		

2.1.4. Wheel balancing correction

Automatic Position Search

Press key 

, the wheel will rotate to the correction position and be locked at top center 12 o'clock position of the rim.

Apply balancing weights with displayed amount to the INNER or OUTER plane in the position onto the rim at TDC (12 o'clock)

After balance weights applied on the wheel, lower the protection hood, and proceed a test wheel spin to check the balancing result.

****

- During applying weights to verify the wheel balance, positioning error might happen, and a few degrees error might cause a residual unbalance as large as 5-10 grams, especially in case of large unbalance.
- In practical wheel balancing operations, available counterweights are 5 grams increments, i.e. 5, 10, 15...60 grams etc. However, an actual unbalance results might be any grams in between, for example, when there is a 23 grams unbalance in actual, and the program will suggest 25 grams to balance it.
- The facts described above might cause an unsatisfied balancing result, if such cases happen, it is recommended to remove the applied weights from the rim and redo the balancing.

Always check if the balancing weights (clip-on or stick-on weights) are securely applied onto the rim. A weight not fitted securely might come off as the wheel rotates and

causes dangers. **********

2.1.5. STANDARD ALU PROGRAMS

With the rated wheel data, A, W and D entered, there are 5 standard ALU modes rated available, the different possibilities of weight application have been taken into account. All standard ALU programs provide correct unbalance values while maintaining the rated geometric data A, W and D setting of the alloy wheel.

STANDARD ALU Programs	Indicators display	Descriptions
ALU1 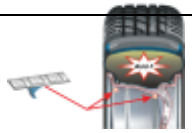		For both INNER and OUTER adhesive weights to be applied inside the rim as illustrated.
ALU2 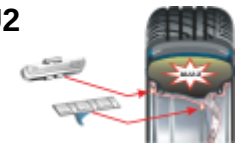		Clip type weight to be applied for INNER plane, and adhesive weight to be applied inside the rim for OUTER plane as illustrated.
ALU3 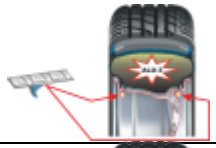		As illustrated, only adhesive weights have to be applied for INNER and OUTER planes
ALU4 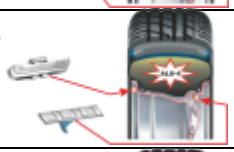	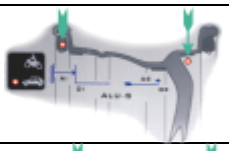	Clip type weight to be applied for INNER plane, and adhesive weight to be applied for OUTER plane as illustrated.
ALU5 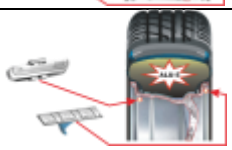		Adhesive weight to be applied inside the rim for plane, INNER and clip type weight to be applied for OUTER plane, as illustrated

SWITCHING ALU PROGRAMS

STEP 1: After entering the wheel standard data A, W and D, or after a Standard dynamic balancing test is done 

t to toggle the suitable program for your application.

STEP 2: Spin the wheel as per the procedures described in the section of standard dynamic balancing. .

STEP 3: Search weight as per the procedures described in the section of standard dynamic balancing.

STEP 4: Apply balancing weights as per the selected ALU program illustrated.

STEP 5: Proceed a test spin to check the balancing correction result

- **Laser pointer forALU-1**

For the models with laser pointer, ALU-1 program will relocate the weight form top position (12 o'clock) to bottom position (6 o'clock). As the weight point reaches to the correction angular position, the laser light will project on the wheel, where indicates the correction weight to be stick on.

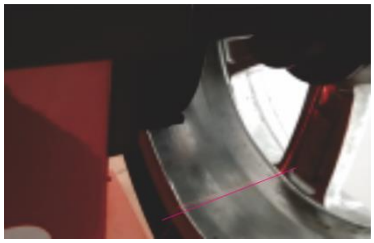

****

Some slight residual unbalances may remain at the end of the test spin due to the considerable difference in shape that may be found on rims with same rated dimensions. Therefore, if the standard ALU programs are not giving a satisfied balancing result, choose the variable plane program ALU-S to have correct balancing.

****

2.2. STATIC BALANCING

Instead of applying weights on both INNER (left) and OUTER (right) side, to balance a wheel by using a single counterweight on a single position is called Static Balancing. A wheel can be balanced statically, however, ignoring dynamic unbalance will become riskier with an increasing of wheel width size. Therefore, static balancing is suitable for wheels with small width.

The static balancing is related to the diameter **D** only, it is nothing to do with distance and width.

Make a normal standard dynamic balancing spin, after the readouts displayed, select 

icon to enter static balancing mode. Now, the display changed as the picture illustrated.


Switch to motorcycle static balancing mode


Switch to car wheel static balancing mode

Switch to standard dynamic balancing mode

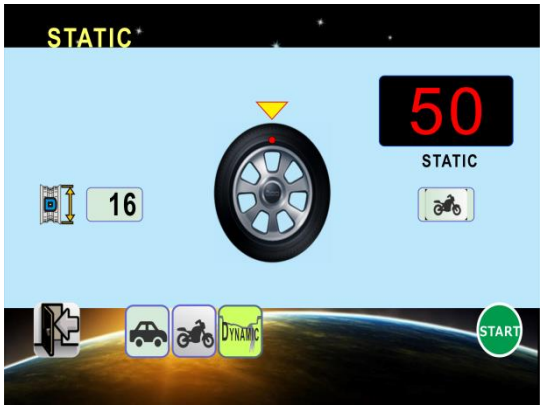

2.2. ALU-S PROGRAM (VARIABLE PLANE PROGRAM)

This program makes it possible to apply adhesive weights in user selected positions. It is used for maximum precision balancing of light alloy rims that require both weights for inner and outer planes to be applied on the inside surface of the rim.

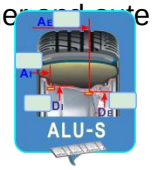

Select from home screen to enter ALU-S program, the ALU-S wheel data entry screen is brought out, as illustrated.

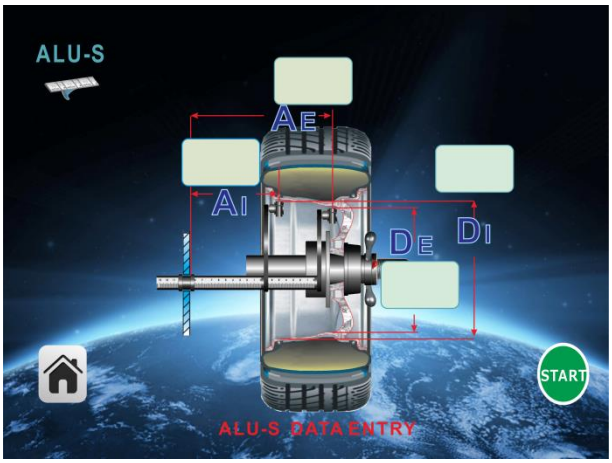

Definitions:

AI= Distance of INNER (left) plane

DI = INNER (left) plane diameter.

AE =Distance of OUTER (right) plane.

DE = OUTER (right) plane diameter.

- **WHEEL GEOMETRIC DATA ACQUISITION**

Geometric data relating to the actual balancing planes other than the rated wheel data (A,W and D as in standard dynamic and standard ALU programs) have to be entered. The balancing planes where the adhesive weights are to be applied may be selected by user according to the specific shape of the rim.

However, it is preferable to select balancing planes as far apart as possible in order to reduce the quantity of weights to be applied, normally, the distance between 2 planes shall be more than 38 mm (1.5 inches).

NOTE: Select an area of rim free of discontinuity, so that the weight can be applied in that position.

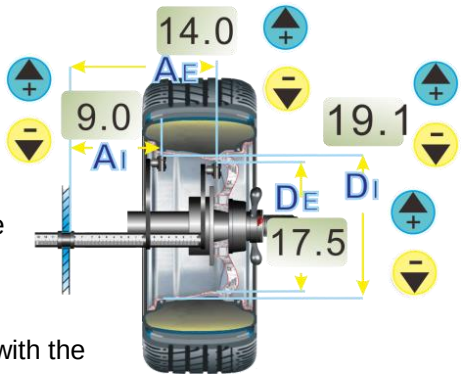

STEPS

As shown in the picture, move the front measuring arm in line with the selected INNER plane for weight application, hold it in the position for about 2 seconds until the wheel data displayed in the corresponding windows, then, Do NOT return the measuring arm back to rest position. Keep moving the measuring arm to line up with the selected OUTER plane, hold it in the position for 2 seconds until the numbers displayed in corresponding windows. The data AI, DI, AE and DE is now acquired.

Lower down the wheel hood, spin the wheel and the test result screen comes out.

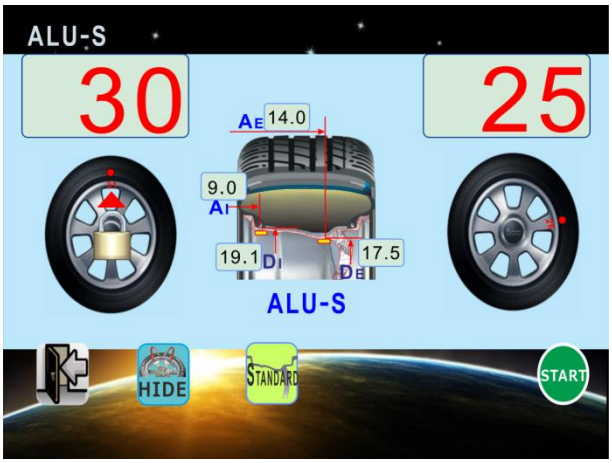

- **Position Search and Weight Application**

As the wheel stops, follow the method described in the section of STANDARD DYNAMIC BALANCING, rotate the wheel to the position of INNER (left) plane for weight application,

the wheel is locked with the solenoid activated.

Prepare an adhesive weight as per INNER (left) weight window indicated, center it to the cavity of weight click holder of the measuring arm, as shown in the figure, keep the adhesive strip facing the internal surface of the rim, move the measuring arm until the mark line show up in the screen, see the picture .

Rotate the arm to line the adhesive weight to the rim surface, press the button of the weight holder eject the weight and make it stick firmly to the rim.

Return the measuring arm to the rest position. Ro
weight position and repeat the same operation m
OUTER (right) plane.

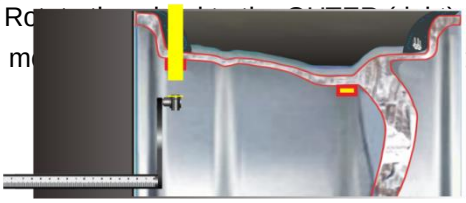

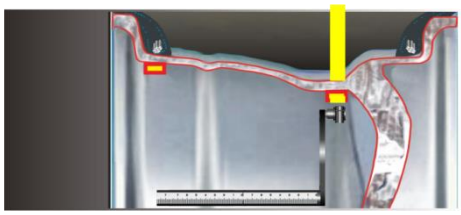

INNER Weight Position OUTER Weight Position

Visualize Weight positioning aid

Note : For ALU-S mode, instead of TDC 12 o'clock, the angular position of weight putting is automatically set by the measuring arm.

- Spin the wheel again to check balancing result.

2.4HIDE SPLIT weight program

(available with ALU-S only)

The HIDE weight program is to split 1 weight in the OUTER (right) plane into 2 weights placed in hidden positions behind 2 spokes of the alloy rim.

Follow the ALU-S procedure, after the spin test done, selection 

to enter the HIDE Weight Program, as shown in the screen.

- This indicates user to enter the number of rim

spokes in the range from 3 to 12.

Enter the number of spokes.

Select  to confirm the number of spoke and enter the next step.

Rotate the wheel and point one of the spokes at TDC 12 o'clock position.

Select  to confirm and enter the next step. Now, the split weight calculation is done.

In this stage, the INNER (left) weight window shows the reading of balancing weight that needs to be added onto user defined INNER (left) plane. The OUTER (right) weight window does not display any reading until one of the 2 target spokes points at the TDC top center 12 o'clock position, corresponding weight will be prompted

Apply the INNER (left) weight with the same procedure described in section ALU-S PROGRAM. Press **STOP** to unlock the wheel for next step.

Rotate the wheel to line the first target spoke at the point that the position indication bar fully illuminated with beep sound, at this moment, the wheel is restrained automatically. The OUTER (right) weight display window shows the weight need to be added in first position behind the spoke.

Select the relevant weight and apply it as per the same procedure of weight application for OUTER (right) plane described in section ALU-S PROGRAM

Repeat the above described procedure to apply the relevant weight behind the 2nd spoke.

2.5OPT – MATCH MOUNT PROGRAM

The OPT Program serves to reduce the amount of weight to be added for balancing a wheel, it is suitable for static unbalance exceeding >30 grams (1.5 Oz).

Select the  icon from the standard dynamic

balancing screen to enter the OPT program.

- Mark a reference line with chalk on the adaptor, tire wall and the rim, take the wheel off the machine, use tire changer to turn the tire on the rim by 180 degrees.
- Inflate the tire and refit the wheel with the reference marks coinciding between rim and adapter.
- Press START perform a wheel spin and enter the next screen, in this example, the upper display shows the actual weight static which can be reduced by matching, the lower display shows the reduction in percentage (%).

- Rotate the wheel until the tire position indication dot points at the top, mark a line on the tire at top center 12 o'clock position.
- Rotate the wheel until the rim position dot points at the top, mark a line on the rim wall at top center 12 o'clock position.
- Press to enter next step.
- Remove the wheel from wheel balancer , use a tire changer to match tire wall and rim markings. Inflate the tire and put it back to balancer to check the matching result.

3 SYSTME SETUP

Select the icon from the home screen to enter system setting screen.

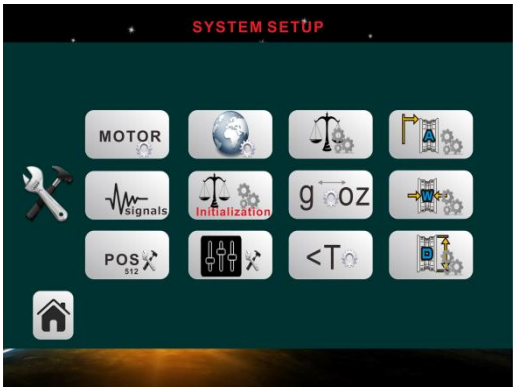

MOTOR Motor setup	Language setting	Balancing calibration	Distance calibration
signals	Initialization	g oz	

Signal check	Balancing initialization	Unit change	Width calibration
Spin shaft position check	Configuration	Accuracy setting	Diameter calibration

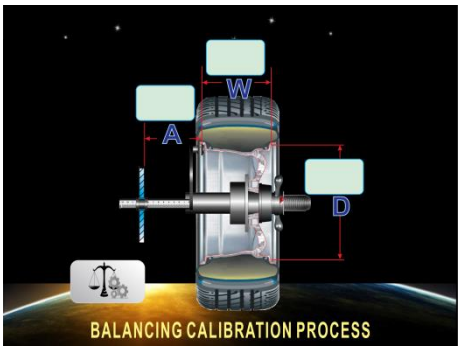

3.1 BALANCING CALIBRATION

Select the icon from the system setting screen to enter the balancing calibration screen.

- Use a wheel with steel rim of average dimension (for example, 6"x 15") mount it properly on the spin shaft. Enter wheel data **A**, **W** and **D** correctly.
- Lower down the wheel hood and press icon to spin the wheel and enter next step.
- Open the wheel hood, rotate the wheel until the wheel pointer on the screen point at the top position.
- Press to confirm.

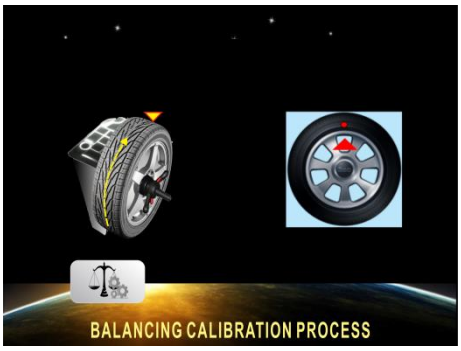

- Mount the provided calibration weight (100g) on the OUTER (right) side of the rim at 12 o'clock position.
- Lower down the wheel hood and press to spin the wheel and enter next step.

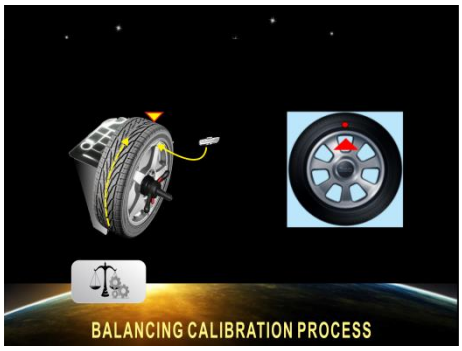

- Open the wheel hood, rotate the wheel until the wheel pointer on the screen point at the top position.
- Remove the calibration weight (100g) from the right side of the rim and put it on the left side of the rim at the same angular position.
- Lower down the wheel hood and press icon

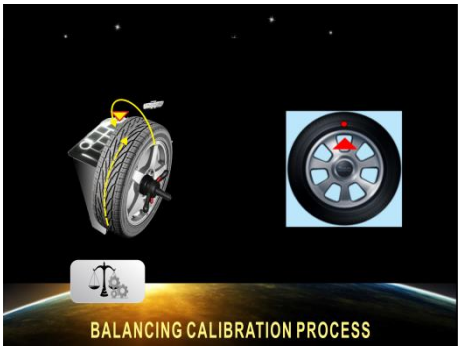

to spin the wheel and complete calibration.

3.2 DISTANCE ACALIBRATION (Available with Auto data entry models only)

Select the  icon from the system setting screen to enter Distance A calibration screen.

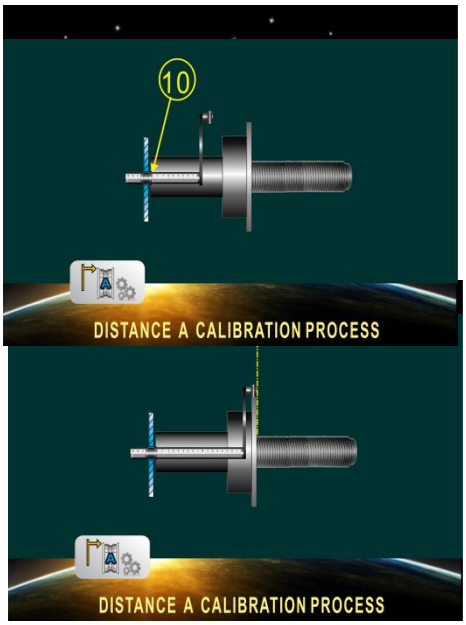

- Pull out the front measuring arm to the ruler scale 10 cm position.

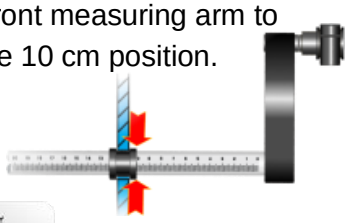

- Press t  and enter the next step.

- Move the arm to point at the spin unit flange as shown in the figure, hold it and press  complete the calibration.

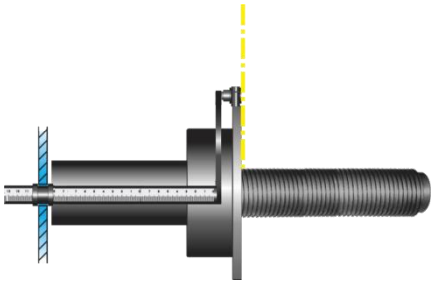

3.3 Diameter Calibration

Select the  icon from the system setting screen to enter Diameter D calibration screen.

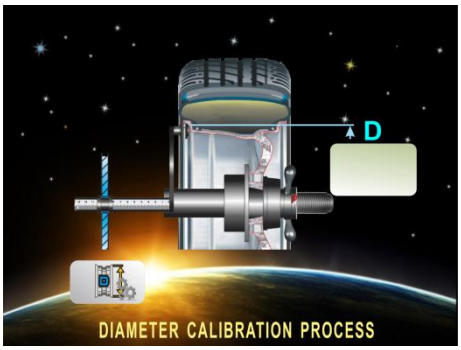

- Mount a wheel on the spin shaft, enter the rim diameter (for example 15 inches), pull out the front measure arm and make the tip contact the rim, as shown in the picture.

- Press  icon to save data and complete the calibration.

3.4 Width W Calibration (for models with sonar device)

Select the  icon from the system setting screen to enter Width D calibration screen

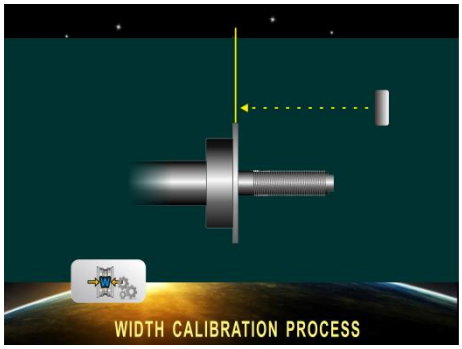

Prepare a flat board(the size is bigger than 20cmX20cm). Put the flat board above the flange, align the it with the flange plane, hold it, as illustrated in the picture.

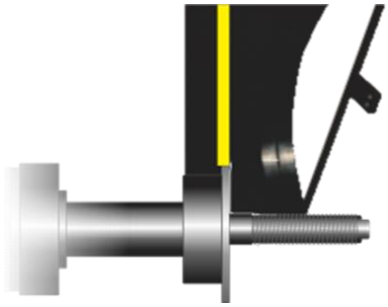

- Lower down the wheel guard.
- Press the  icon to complete the width calibration.

SYSTEM ERROR CODES

Alarm codes	Definitions	Check
Err -1-	Wheel hood opened when start key pressed	Lower down the hood. Press **the alarm screen** to reset.
Err -2-	When spin is activated,	**Case 1:**

	no rotation signal. **Case 1:** Motor is not running. **Case 2:** Motor is running but the optical sensor fails to deliver signal	A: Check if the wheel was blocked by wheel lift; B: Check motor wire connection. C: Check power supply voltage **Case 2:** A: Check if the sensor works. B: Check if encoder plate is normal Press **the alarm screen** to reset.
Err -3-	Hood opened during wheel spinning	Lower down the hood. Press **C** key to reset.
Err -4-	When spin is activated, rotation speed is too low. **Case 1:** Motor is not working normally. **Case 2:** Motor is running normally, but the optical sensor fails to deliver speed signal	**Case 1:** A: Check if the wheel was blocked by wheel lift; B: Check motor wire connection. C: Check power supply voltage **Case 2:** A: Check if the sensor works. B: Check if encoder plate is normal Press **the alarm screen** to reset..
Err -5-	Balancing measurement out of range. **Case 1:** Wheel mounting is far out of centering. **Case 2:** Wheel is damaged or heavy material attached on the wheel.	**Case 1:** Check the centering of the wheel, remount it correctly. **Case 2:** Check the wheel abnormal condition and correct it. Press **the alarm screen** to reset.
Err -6-	Spin is interrupted by operator, such as emergency stop.	Press **the alarm screen** to reset.
Err -7-	Motor is not powered	Check motor wire connection. Check power supply voltage Press **the alarm screen** to reset.
Err -8-	Motor is overload.	Check if the wheel was blocked. Such as blocking by wheel lift. Press **the alarm screen** to reset.
Err -9-	Motor winding sensor is abnormal	Check if the motor sensor wires normal. Press **the alarm screen** to reset.